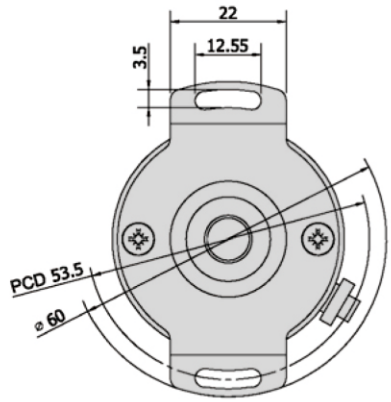

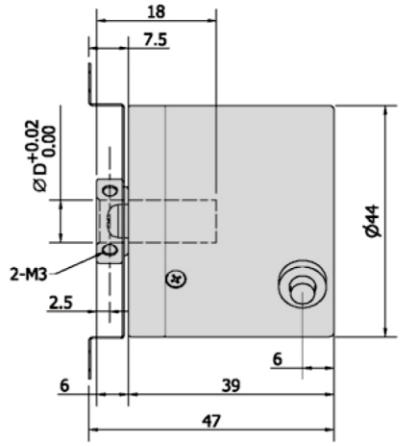

ELECTRICAL SPEC.

Detection System	Incremental 增量型
Output Wave 輸出波形	Square Wave 方波
Standard Number of Pulse Per Revolution 解析	2, 5, 12, 10, 20, 30, 40, 50, 60, 80, 100, 120, 150, 160, 180, 200, 250, 300, 360, 400, 500, 600, 720, 800, 900, 1000, 1024, 1200, 1250, 1500, 1800, 2000, 2048, 2500
Output Phase 輸出相	ABZ phase
Electronics 電路特性	NPN Voltage, NPN Open Collector, Push Pull or Line Driver
Power Supply 供應電源	DC 5~26V
Current Consumption 消耗電流	≤ 60 mA
Output Capacity 輸出容量	Sync. Current: 20 mA, Residual Voltage: 0.5V or less
Max. Response 最大響應頻率	10K Hz ~ 100K Hz
Phase Different 相位差	A, B phase different 90°±45° (T/4±T/8), Z phase T±T/2
Wave Form Rise / Fall 波形上下時間	2 μs or less
Polarity 極性保護	Against Reverse Protection

MECHANICAL SPEC.

Hollow Shaft Diameter 孔徑	6, 8, 10 mm
Shaft Loading 軸荷重	(10 ~ 400 PPR) Axial 軸向: 1 Kg, Radial 徑向: 2 Kg (over 400 PPR) Axial 軸向: 0.5 Kg, Radial 徑向: 1 Kg
Starting Torque (at 25°C) 起動轉矩	30 gf-cm or less
Max. Speed 最大機械容許速度	6,000 rpm
Vibration 震動	10g (10±1,500 Hz)
Shock 衝擊	20g per 11 ms
Cable 電線	Ø4.5, 50 cm long
Weight 重量	≤ 200g

ENVIRONMENTAL SPEC.

Operating Temp. / Humidity 操作溫度/濕度	0°C ~ 60°C, RH 35% ~ 90% (No Condensation)
Storage Temp. 儲存溫度	-20°C ~ 80°C
Protection 保護等級	IP50: Dust Proof

ORDERING INFORMATION

MTR-HB - *Hole Size 中空軸徑* - *Pulse per Revolution 解析* **A** - *Electronics 電路特性*

Hole Size	Pulse per Revolution	Electronics
6: 6 mm **8**: 8 mm **10**: 10 mm	2, 5, 12, 10, 20, 30, 40, 50, 60, 80, 100, 120, 150, 160, 180, 200, 250, 300, 360, 400, 500, 600, 720, 800, 900, 1000, 1024, 1200, 1250, 1500, 1800, 2000, 2048, 2500 P/R	**V**: NPN Voltage **C**: NPN Open-Collector **P**: Push-Pull *H: Line Driver